INTELLIGENT AGENTS AND SYNTHETIC CHARACTERS GROUP

Real-time Sensory Pattern Mining for Autonomous Agents

Pedro Sequeira and Cláudia Antunes

ADMI-10

May 11, 2010

Outline

- Motivation
- Problem
- Proposed Solution
- Experimental Results
- Conclusions and Future Work

Outline

- **Motivation**
- Problem
- Proposed Solution
- Experimental Results
- Conclusions and Future Work

Autonomous Agents (1/2)

- Definitions: [*Franklin & Graesser*, 1997; *Maes*, 1994]
  - situated in dynamic environments
  - have and actively pursue goals
  - satisfy their needs
  - respond to external events from the environment

Autonomous Agents (2/2)

- Requirements: [*Franklin & Graesser*, 1997; *Maes*, 1994]
  - mechanisms to distinguish perceived features
    - focus on relevant features, ignore non-important ones
  - adapt to and learn new knowledge from the environment
  - structures that represent the acquired knowledge
  - mechanisms that update these representations overtime to reflect interaction experience

Pattern Mining

- Data-Mining: [*Frawley*, 1992]
  - techniques to extract previously unknown and possibly useful information from data
- Pattern-Mining: [*Agrawal*, 1994]
  - technique to discover frequent patterns, associations, correlations, or causal structures among sets of items or objects

Idea

- Main idea:
  - use pattern mining techniques within an autonomous agent
  - extend and adapt some pattern mining algorithms and structures
- Objective:
  - discover associative patterns in the agent's perceptions
  - discovery made while interacting with the environment
- Result:
  - patterns can provide useful knowledge about the world
  - form concepts of regularities

Outline

- Motivation
- **Problem**
- Proposed Solution
- Experimental Results
- Conclusions and Future Work

Problem

Scenario

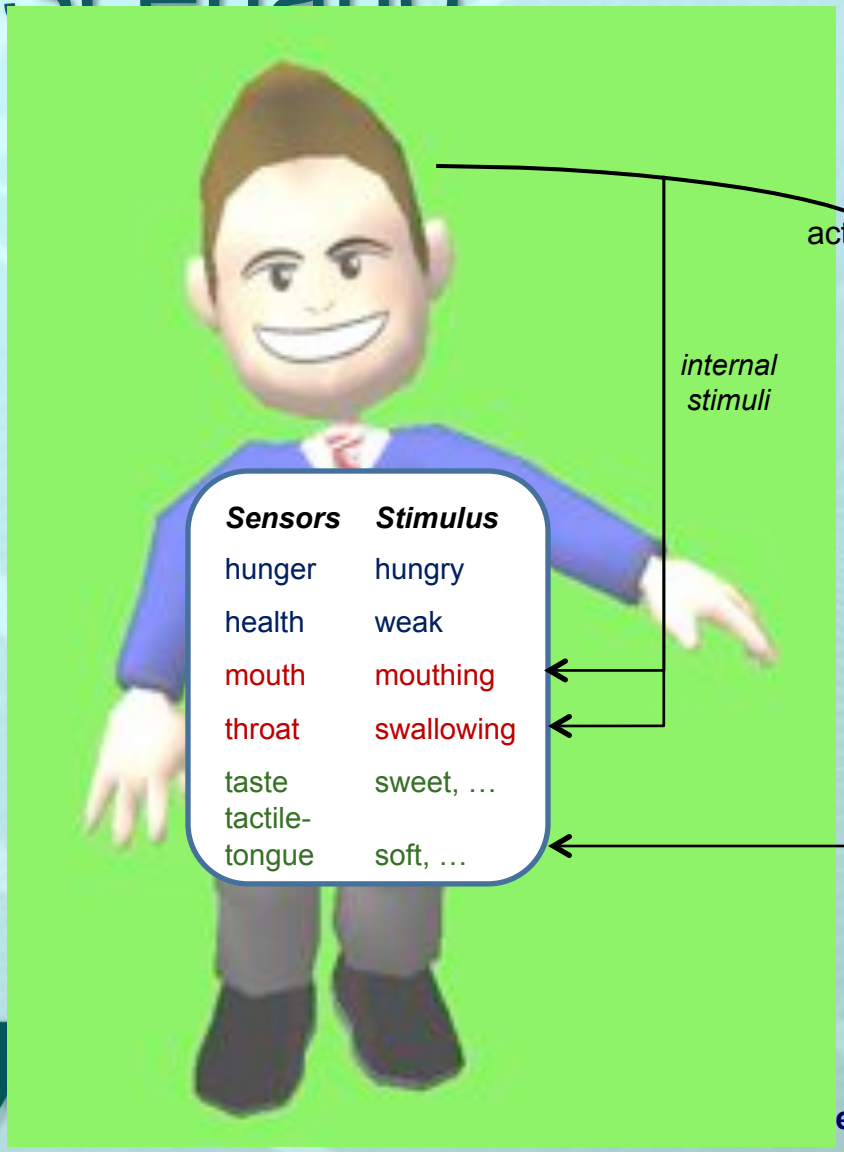

action *eat*

internal stimuli

Sensors	***Stimulus***
hunger	hungry
health	weak
mouth	mouthing
throat	swallowing
taste	sweet, …
tactile-tongue	soft, …

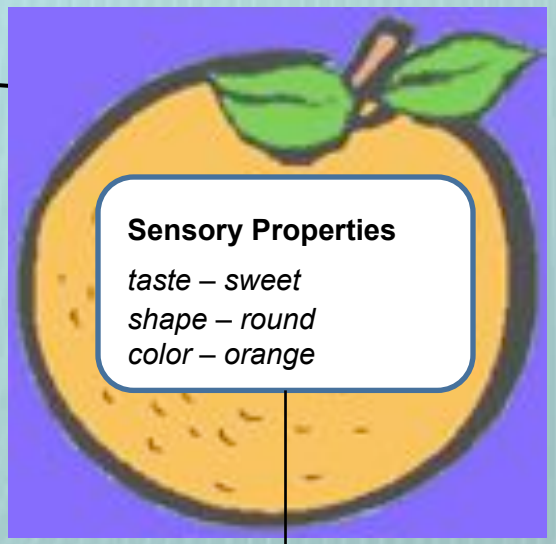

Sensory Properties

taste – sweet
shape – round
color – orange

object properties

Pattern-Mining Analogy (1/2)

- Transactional Pattern Mining:

TID	Items bought					
1	*{ beer,*	*red wine,*	*whiskey,*	*tequila,*	*vodka,*	*rum }*
2	*{ beer,*	*white wine,*	*red wine }*			
3	*{ tequila,*	*whiskey,*	*rum }*			
4	*{ beer,*	*whiskey,*	*tequila,*	*red wine }*		
5	*{ whiskey,*	*vodka }*				
6	*{ tequila,*	*beer }*				
7	*{ vodka,*	*rum,*	*red wine,*	*beer }*		
…	*{ … }*					

Transaction Database

Pattern-Mining Analogy (2/3)

- Transactional Pattern Mining: [*Agrawal*, 1994]
  - Discover patterns in *Transactions*
  - *Patterns* are maximal sets of *Items*
    - occur together very often
    - number of transactions of co-occurrence > *Support*

$$\mathrm{Sup}(A \rightarrow B) = P(A \cap B) = \frac{|A \cap B|}{N}$$

Problem

Pattern-Mining Analogy (2/2)

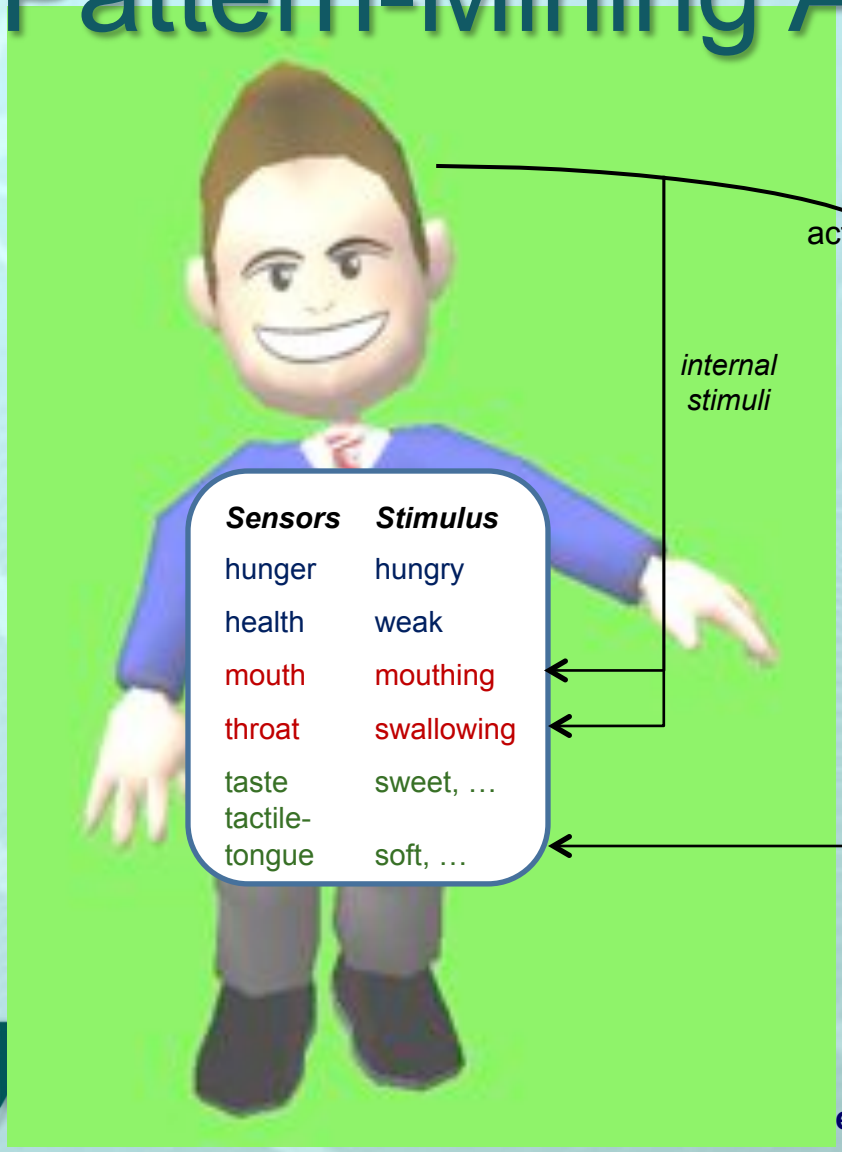

action *eat*

internal stimuli

Sensors	***Stimulus***
hunger	hungry
health	weak
mouth	mouthing
throat	swallowing
taste	sweet, …
tactile-tongue	soft, …

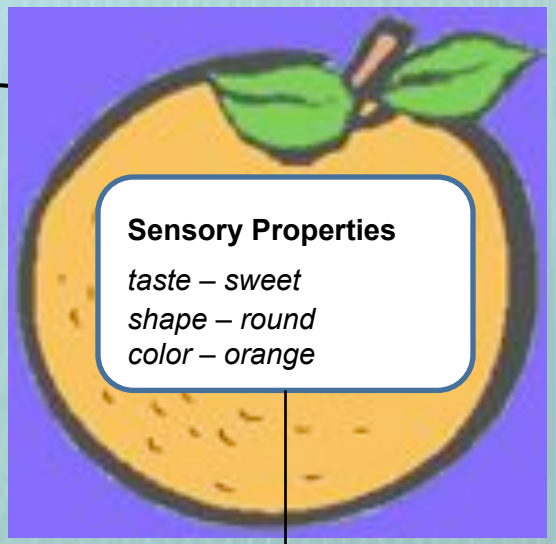

Sensory Properties

taste – sweet
shape – round
color – orange

object properties

Problem

Pattern-Mining Analogy (2/2)

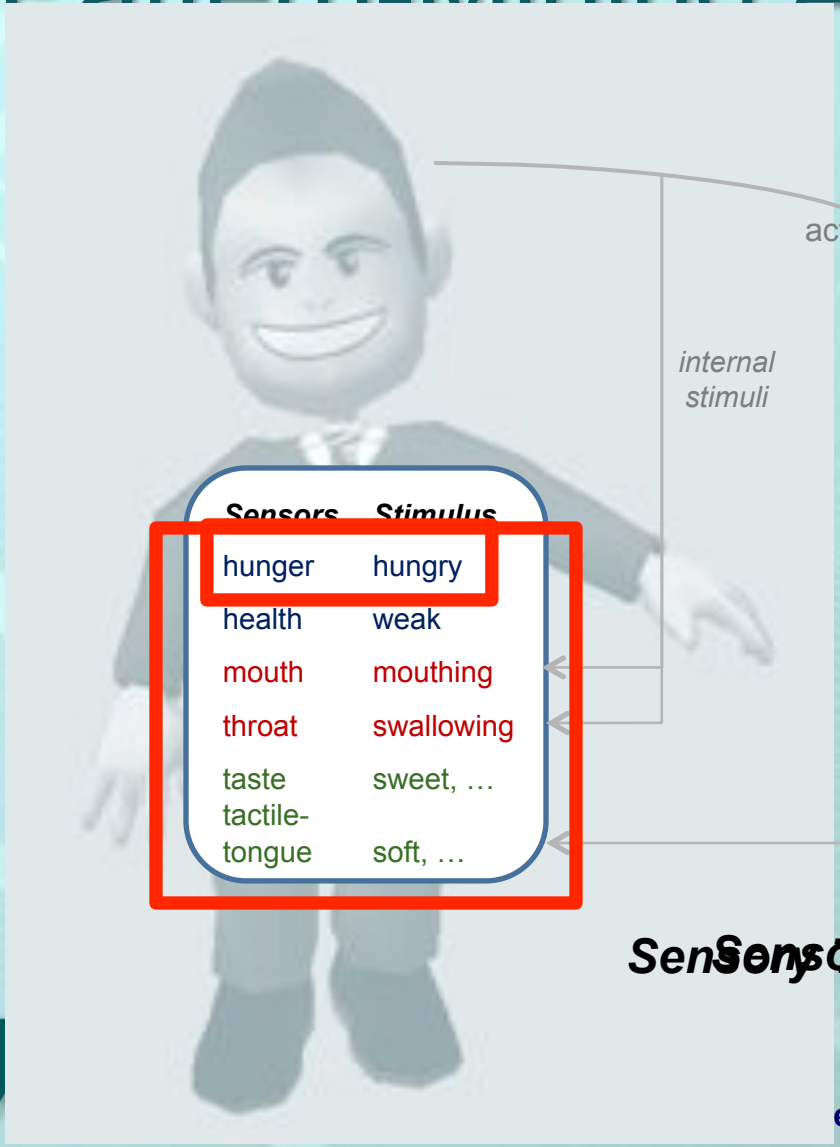

action *eat*

internal stimuli

Sensors	Stimulus
hunger	hungry
health	weak
mouth	mouthing
throat	swallowing
taste	sweet, …
tactile-tongue	soft, …

Sensory Properties

taste – sweet
shape – round
color – orange

object properties

Sensory Transaction

Pattern-Mining Analogy (3/3)

- Sensory Pattern Mining:

TID	Agent's Stimuli					
1	*{ orange,*	*hungry,*	*sweet,*	*round,*	*weak,*	*mouthing }*
2	*{ orange,*	*white wine,*	*hungry }*			
3	*{ round,*	*sweet,*	*mouthing }*			
4	*{ orange,*	*sweet,*	*round,*	*hungry }*		
5	*{ sweet,*	*weak }*				
6	*{ round,*	*orange }*				
7	*{ weak,*	*mouthing,*	*hungry,*	*orange }*		
…	*{ … }*					

Problem Definition

- Find *synchronous sensory patterns*:
  - sets of stimuli that occur frequently and simultaneously
  - reveal some regularities of its environment
- Requirements:
  - real-time discovery while interacting w/ environment
  - maintain in memory the maximum number of patterns
  - gather useful information to be used by the agent
  - efficient algorithm

Outline

- Motivation
- Problem
- **Proposed Solution**
- Experimental Results
- Conclusions and Future Work

Transactional Pattern Mining (1/2)

- Apriori: [*Agrawal*, 1994]
  - iteratively generates the set of candidate *itemsets* of length *k* from the set of frequent-patterns of length *k-1*
- FP-Growth: [*Han*, 2004]
  - builds up a compact structure (*FP-Tree*) from the data
  - requires only 2 steps:
    - frequency count
    - build *FP-Tree*
  - frequent patterns search only from the tree

Transactional Pattern Mining (2/2)

- Drawbacks:
  - requires a first scan to order items by frequency
    - impossible to realize in autonomous agent‘s
  - algorithm determines ***all*** the frequent *itemsets*
    - sometimes difficult to determine if ***a*** specific *itemset* is a *pattern*
  - *FP-Tree* is a very compact structure
    - difficult to discover patterns if in real-time

Problem Definition

- Find *synchronous sensory patterns*:
  - sets of stimuli that occur frequently and simultaneously
  - reveal some regularities of its environment
- Requirements:
  - real-time discovery while interacting w/ environment
  - maintain in memory the maximum number of patterns
  - gather useful information to be used by the agent
  - efficient algorithm

Real-Time Pattern Mining

- Modify *FP-Growth* for real-time:
  - discard first scan over the DB to perform sorting
  - use alphabetic order of the symbols (stimulus)
- Change transaction insertion into *FP-Tree*
  - each node represents a specific *itemset*
  - node count represents *itemset* frequency
- Pruning heuristic
  - delete nodes that do not seem promising
  - prune if *support* is below predefined threshold

Example

- Insert transaction *{a, b, c}*:

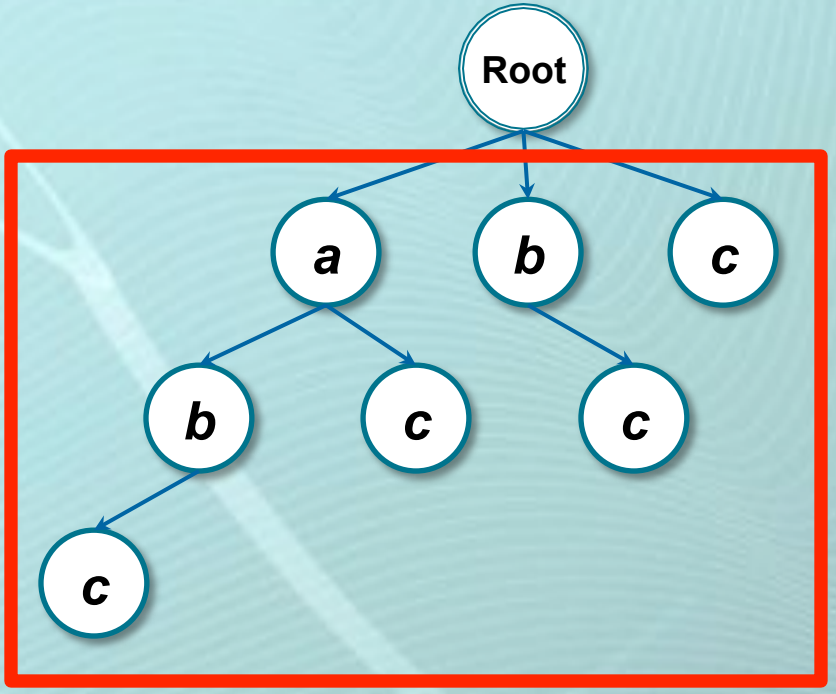

"abc"
Dependency Tree

Problem Definition

- Find *synchronous sensory patterns*:
  - sets of stimuli that occur frequently and simultaneously
  - reveal some regularities of its environment
- Requirements:
  - real-time discovery while interacting w/ environment
  - maintain in memory the maximum number of patterns
  - gather useful information to be used by the agent
  - efficient algorithm

Jaccard Index (1/3)

- Pattern definition problem:
  - based on the statistic of the frequency of an *itemset*
  - in relation to the total number of transactions recorded
  - some items are correlated, but their frequency is low
  - useful information is sometimes discarded

Jaccard Index (2/3)

- Jaccard Index: [*Jaccard*, 1912]
  - determines the correlation level between nominal variables (like the agent's sensations)
  - function of the frequency of their intersection over their union:

$$\mathrm{Jacc}(AB) = \frac{|A \cap B|}{|A \cup B|} = \frac{|A \cap B|}{|A| + |B| - |A \cap B|}$$

Jaccard Index (3/3)

- Advantages:
  - useful heuristic to determine sensory patterns in agents' perceptions
  - ignores the total number of perceptions made so far
  - all necessary values already in the tree:
    - divide the count value of the node
    - by the weighted sum of nodes within its *Dependency Tree*

Example

- Jaccard index of *itemset* "*abc*":

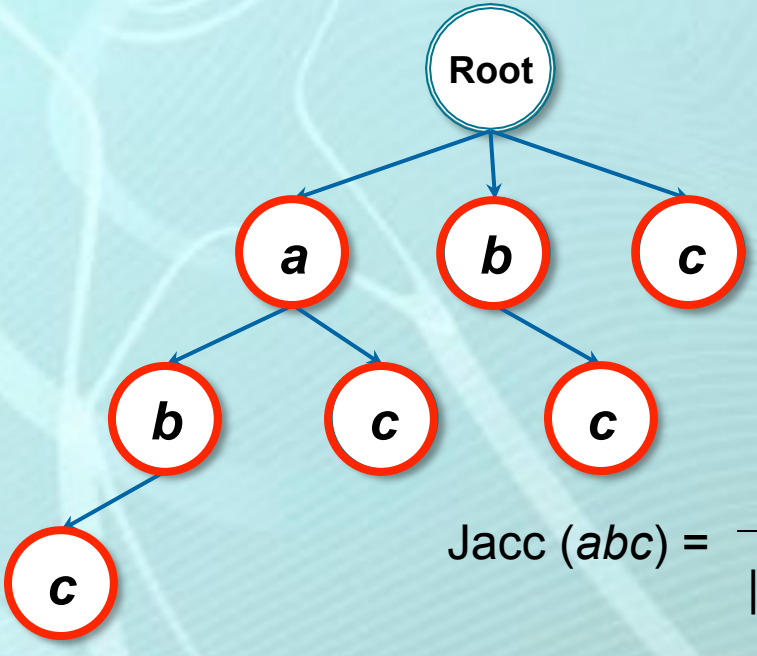

$$\text{Jacc}(abc) = \frac{|a \cap b \cap c|}{|a| + |b| + |c| - |a \cap b| - |a \cap c| - |b \cap c| + |a \cap b \cap c|}$$

Outline

- Motivation
- Problem
- Proposed Solution
- **Experimental Results**
- Conclusions and Future Work

Test Conditions (1/2)

- Test environment: [*Sequeira*, 2007]
  - agent has random behavior, at each decision step:
    - chooses an object from the environment to interact with
  - 5 possible actions
  - total of 8 objects to interact with
  - total of 13 sensors to perceive the environment
  - 70 possible stimuli to describe the perceptions

Test Conditions (2/2)

- record file with a sensory transaction per line
- total of 10 test files with10K transactions (length ≈ 5)
- for each test file
  - iterate minimum support threshold
  - 0 to 1, 0.1 steps

Test Metrics

- time to build the tree measured in CPU time (***Build-Time***)
- number of nodes used to build the tree (***Node-Number***)
- time used to retrieve from the tree every possible pattern, measured in CPU time (***Pattern-Time***)
- total number of patterns found (***Pattern-Number***)

Main Results

- *Jaccard-Index* algorithm:
  - if minimum index threshold is too low:
    - too many: nodes, patterns, time scanning the tree for patterns
    - compromise between performance and usefulness
  - more time to build tree and search for patterns than *FP-Growth*-based algorithms due to index calculation
  - however, mining performance is enhanced
    - tree maintains in memory all the nodes necessary for the index calculation (its *Dependency Tree*)

Outline

- Motivation
- Problem
- Proposed Solution
- Experimental Results
- **Conclusions and Future Work**

Problem Definition

- Find *synchronous sensory patterns*:
  - sets of stimuli that occur frequently and simultaneously
  - reveal some regularities of its environment
- Requirements:
  - real-time discovery while interacting w/ environment
  - maintain in memory the maximum number of patterns
  - gather useful information to be used by the agent
  - efficient algorithm

Conclusions

- Algorithm can be a solution to our problem:
  - generates patterns of sensory data from the agent's perceptions
  - based on the statistical correlation between stimuli
  - can perform the task in real-time
  - while the agent interacts with the environment
  - reflects the agent’s experience

Future Work

- Extend the current algorithm:
  - discover *asynchronous sensory patterns*:
    - sets of stimuli that frequently occur one after the other, revealing causal relations between them
    - adapt algorithms from the sequential pattern mining area
  - test the solution within a multi-agent scenario
    - discover “social knowledge” to reflect the experiences of particular groups


THANK YOU ALL FOR LISTENING!